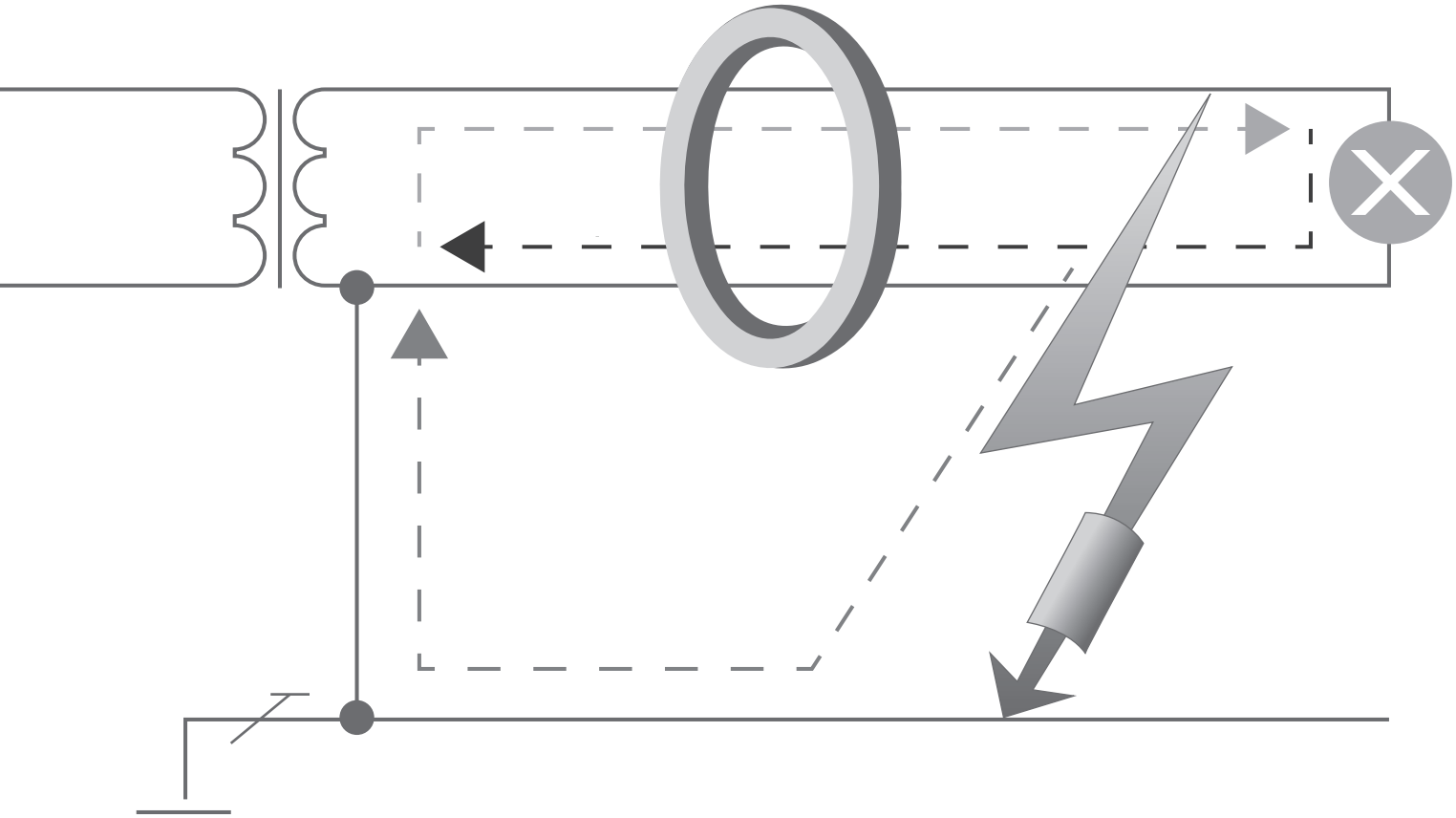

ULTIMATE TOOL
RESIDUAL CURRENT MONITORING

RCM white paper

Janitza®

HIGHER SYSTEM AVAILABILITY & LOWER FIRE HAZARD

Data Centers, Hospitals & Medical Centers, and Industrial Manufacturing continuous processes (e.g. food, pharma, chemical, semiconductor, ...) all need a continuous and essential supply of power. This means a power supply availability of at least 99.9 %, often even 99.9999 %. Even though 99% availability sounds pretty good, the fact must still be considered that, with 24-hour operation, 87.7 hours of downtime per year must still be expected, compared to only 0.53 minutes for "six nines" (99.9999 %).

Short voltage anomalies or residual currents can cause power loss, resulting in process failures that result in time-consuming and unwanted high-cost downtime. Similarly, these facilities do not want time-consuming mandatory shutdowns for electrical system inspections.

Residual current monitoring devices significantly reduce shutdown times by employing a suitable management system and they serve as a preventive maintenance measure.

TN-S SYSTEMS AS THE BASIS FOR RCM

TN-S systems are mandatory for systems involving information technology. In contrast to the TN-C systems commonly used in the past, they have enhanced EMC properties, and also enable residual current monitoring (RCM).

With a total-network, continuous monitored RCM system, residual currents in TN-S systems can be localized directly. The user can react before a critical level is reached. In this way, the risk of breaker tripping, fire and harmful EMC interferences can be avoided.

RCM measurement devices from Janitza are suitable for monitoring residual currents of type A, B and type B+ (device-dependent) and can be used for continuous monitoring in TN-S systems from the utility incomer down to the final outgoing circuit.

Systems in newly constructed buildings must be constructed as TN-S systems from the point of feed-in. Please make sure to check your local regulations.

Safety first
- Avoid system failures
- Improve fire protection
- Avoid electrical shock for humans

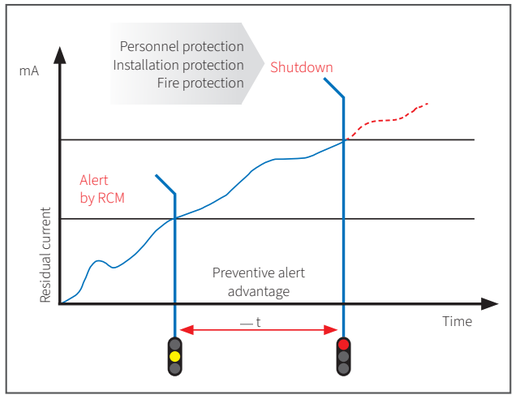

Fig.: Early reporting instead of switching off

Advantages of Continuous residual current monitoring
- Early detection and reporting of residual currents through continuous monitoring, thus avoiding circuit failure
- Continuous monitoring of proper function in TN-S systems
- Minimization of faults on grounded equipment and thus increased system availability through EMC compliance
- Reduced testing effort on stationary electrical systems, within the scope of IEC 60364-6:2021
- Insulation measurements on fixed electrical systems and the associated shutdown can be omitted
- No danger to sensitive consumers that could be damaged by the high voltages of insulation resistance test
- No high personnel and administrative expenses due to shutdowns and thus reduced costs
- Maximum alternative safety in areas where RCDs cannot be used for operational reasons
- Early warning system for RCDs and ground-fault switches

Reduce inspection costs with RCM

Residual current monitors (RCMs) not only ensure maximum safety, they also help reduce costs. Periodic inspections, such as those required by IEC 60364-6, are time-consuming and costly. For conventional insulation measurement, stationary equipment and the consumer must be switched off. In addition, there is a risk that sensitive electronic components may be damaged by the high test voltage of the insulation measurement. However, the insulation resistance does not have to be measured if the circuit is continuously monitored by a residual current monitor.

Stationary electrical installations and equipment are considered to be under continuous monitoring if they are maintained by electrically qualified persons on an ongoing basis and tested by means of metrological measures during operation (e.g. monitoring of the insulation resistance).

The test severity and scope can be significantly reduced by continuous monitoring. However, this must be defined on an application-specific basis. The acceptance and risk assessment of an overall RCM monitoring system by an expert or the employers liability insurance association is recommended, but not mandatory.

Having RCM measurement does not exempt you from performing the following items as part of the inspection of stationary electrical installations:
- Visual inspection for externally visible defects
- Protective measures and shutdown conditions
- Loop resistances and continuity testing of protective conductors
- Functional tests

Continuous monitoring instead of inspections

For installations that are subject to an effective preventive maintenance and servicing management system during normal operation, periodic inspections may be replaced by the appropriate performance of continuous monitoring and maintenance of the installation and all its equipment by electrically qualified persons. Appropriate evidence must be kept available.

RCM AS AN ALTERNATIVE FORM OF SAFETY

Residual current monitors (RCMs) are not protective devices, but they may be used to monitor residual currents in electrical systems. Residual current monitors trigger an audible or visible signal if the preselected residual current value is exceeded. When used in systems without residual current devices (RCDs), residual current monitoring must be provided up to the final circuit if at all possible.

In all areas where RCDs cannot be used, a continuous residual current monitoring device is recommended to detect and report damage in good time. The electrically qualified person can thus recognize the need for action and eliminate the fault by taking specific measures. All in all, RCM always has a positive effect on the risk assessment of the installation.

In electrical circuits where an RCD already exists, the RCD will disconnect the load at approx. 15–18 mA. Having RCM also present in this circuit, gives the user the added advantage of pre-empting this disconnection. The user can create single or multiple alarm thresholds to warn against possible disconnection, avoiding unnecessary downtime.

Required RCDs

According to some norms RCDs with a rated current of 30 mA must be provided for: sockets in final circuits for alternating current (AC) with a rated current not greater than 32 A intended for use by laymen and for general use, and in final circuits with permanently connected portable equipment for alternating current (AC) for outdoor use with a rated current not greater than 32 A.

Sockets with a rated current not greater than 32 A can be exempted from this requirement if measures are defined within the scope of a risk assessment that permanently exclude the general use of these sockets.

RCM in data centers

A typical application for RCM systems is data centers. Especially in data centers, all previously described topics (clean TN-S system, no shutdowns due to inspections or as alternative RCDs) are essential.

BITKOM, Germany's digital association, for example, writes in its guide "Operationally Secure Data Centers" as follows: "Data centers pose the highest availability requirements. Accordingly, the energy supply must be ensured on a sustainable basis. It is almost self-evident that the power supply of the data center itself and all areas in the same building to which data cables run must be designed as a TN-S system. An absolute necessity for safe operation is the continuous self-monitoring of a "clean" TN-S system and the connection of the messages to a permanently manned point, e.g. to the control center."

The standard for data centers requires residual current monitoring

DIN EN 50600-2-4: 6.5 / ISO / IEC 22237-3
Additional considerations
6.5.1 Residual current measurement

Equipment must be installed that is capable of measuring and recording residual currents at the connections between the protective conductors and the neutral conductors of the power distribution system of the data center building.

HOW RESIDUAL CURRENT MONITORING WORKS
The phases and the neutral conductor of the feeder to be protected are led through the summation current transformer, while the protective conductor is excluded. In systems without a neutral conductor, for example in regulated drives, only the three phases run through the summation current transformer. When the system is in the fault-free state, the summation current is zero or close to zero (within the tolerance range), so that the current induced in the secondary circuit is also zero or close to zero. If, on the other hand, a residual current flows to ground in the event of a fault, the current imbalance causes a current in the secondary circuit which is detected and evaluated by the RCM measurement device. The measurement is performed according to IEC/TR 60755:2017 (General requirements for residual current devices).

RESIDUAL AND OPERATING CURRENT MONITORING IN ONE DEVICE

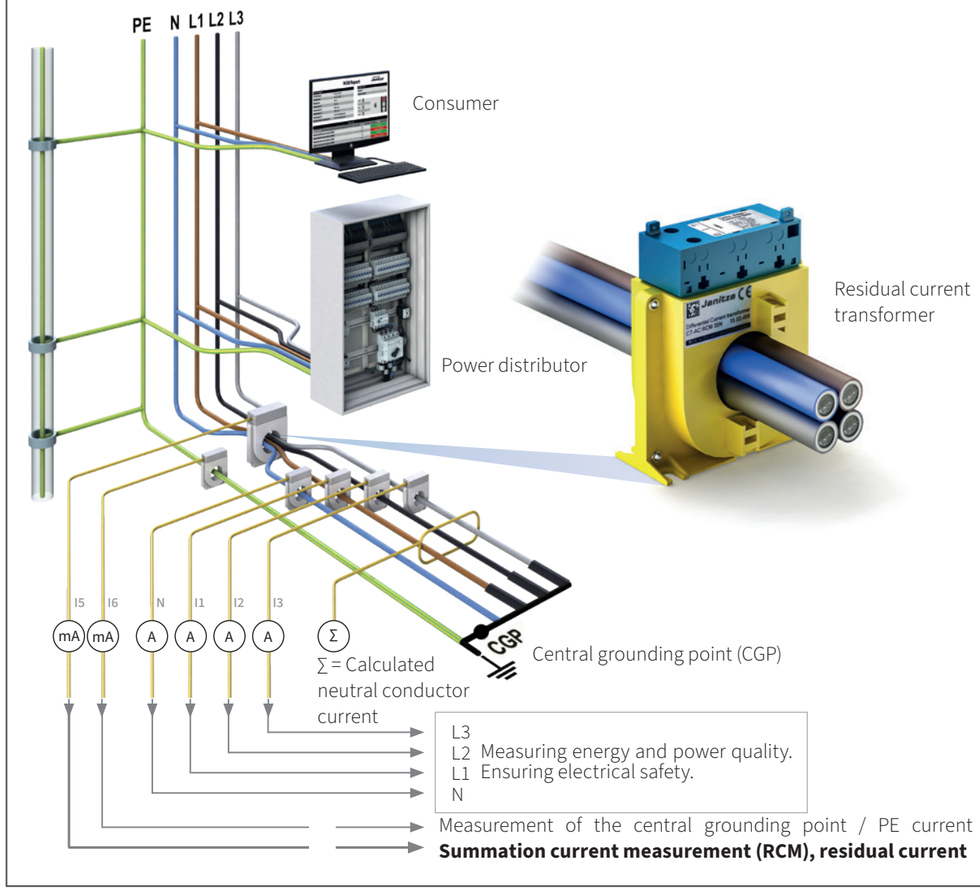

Fig.: Can be implemented with the UMG 512-PRO / UMG 509-PRO / UMG 96RM-E and UMG 96-PA network analyzers (with RCM module).

RESIDUAL CURRENT TYPES
In the case of electronic equipment (e.g. frequency converters) operated directly on the three-phase mains with switching of the input circuits, the use of all-current sensitive residual current devices (type B) is required. For this selection, type B and type B+ are to be considered equivalent. In other applications, the use of type A residual current devices (pulse current sensitive) is sufficient. A type A RCD goes into saturation at a DC current of 6 mA or more and critical type A faults can no longer be safely disconnected. A type A RCM, on the other hand, is only affected at more than 20,000 mA DC. A Janitza type A RCM therefore works even at very high DC currents.

TYP A

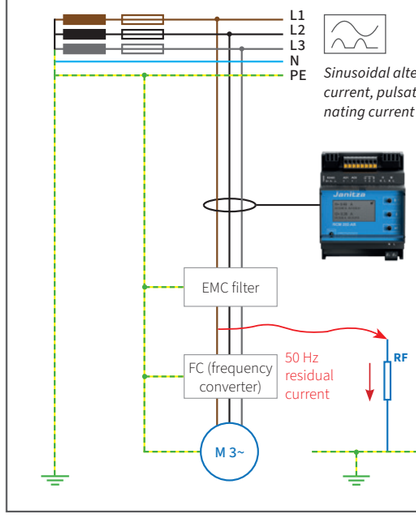

TYP B

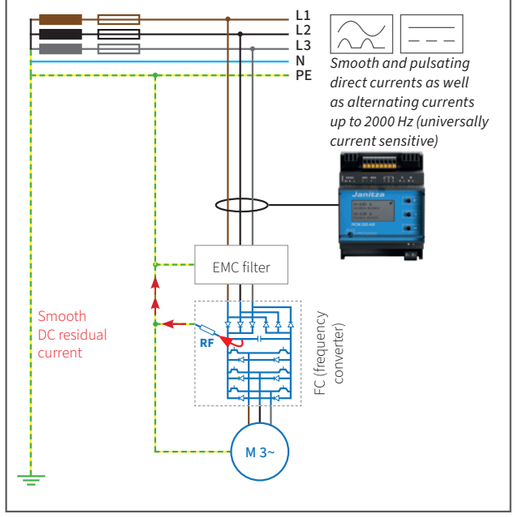

TYP B+

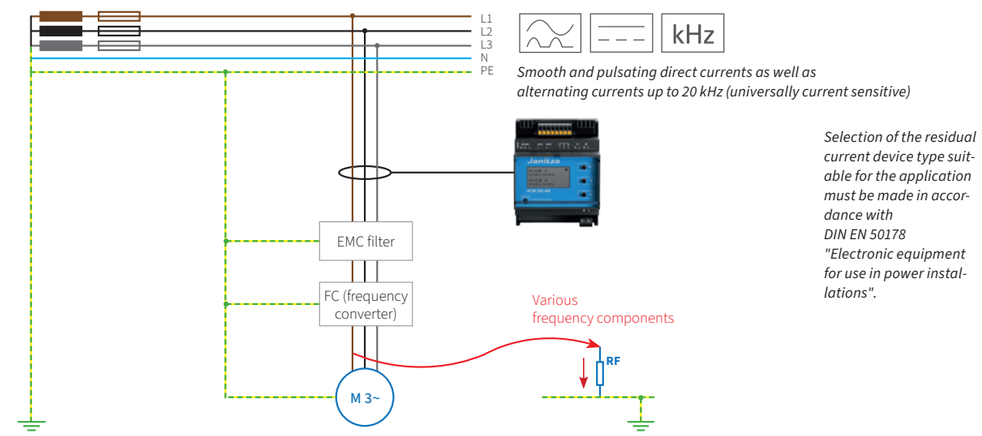

Application	Type of residual current	Residual current shape	Where used	Functions correctly with
Ohmic consumers, purely inductive and capacitive consumers, lighting systems with CB and transformer, direct-starting motors without electronic regulation and control, etc.	Sinusoidal alternating current	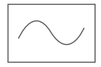	No longer up to date, as there are hardly any systems with only equipment of this type	 Type AC AC current sensitive
Single-phase electronic devices and devices with electronic regulation and control such as: power supplies, computers, lighting systems with electronic ballast or electronic transformers, single-phase drives, heat pumps, etc.	Pulsating alternating current (positive or negative half-wave)		All areas, especially single phase e.g. apartments, small offices, etc.	Standard switches for modern households  Type A Alternating current + pulse current sensitive
Single-phase dimmers and devices with phase-angle or phase cut-off control	Phase angle controlled half-wave currents Phase angle of 90° el and 135° el			
Single-phase electronic devices operated in the three-phase network distributed over the phases (a small direct current component is produced by superimposing pulsating residual currents)	Pulsating alternating current superimposed on smooth direct current of max. 6 mA			
Devices with three-phase bridge circuits and purely direct current systems, e.g. photovoltaic systems (collector-side)	Smooth direct current		Industry, especially 4-pole, for PV systems also 2-pole DC and in all systems where purely DC residual currents can occur, e.g. construction sites	  Type B Alternating current + Pulsed current + Direct current = All-current sensitive
Controlled three-phase drives (FC), e.g. controlled three-phase motors, three-phase UPS systems, three-phase dimmers, med. three-phase devices, etc.	High frequency, up to 1000 Hz and above	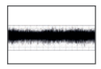		

Application overview

EFFECTS OF RESIDUAL CURRENTS ON OPERATING EQUIPMENT

Phase, Neutral & PE conductors should be arranged close together in distribution networks to minimize magnetic fields. At each node of a circuit, the sum of the currents must be zero to avoid residual currents. With RCM monitoring, the correct status is checked continuously.

Vagrant currents disturb the EMC. Incorrect connections between N and PE conductors lead to "vagrant" operating currents being distributed via the PE system, data lines and all metal parts of the building. Because these currents are not balanced, they generate electromagnetic fields. The consequences are many types of disturbances in the electrical systems, EDP networks and piping systems of the building installation. The diagram below illustrates how the operating current is divided at the PEN bridge and can flow back over several paths, which means that the sum of the currents over the supply and return conductors is no longer 0.

Possible malfunctions due to residual currents:

- Change in the operating behavior of frequency-dependent components (e.g. capacitors consume more current)
- Disturbance of data transmissions due to magnetic and inductive influences
- Transmission of lightning influences into the electrical system
- Corrosion on metallic pipes
- Heath & safety concerns to personnel

IMPERMISSIBLE OPERATING CURRENTS ON GROUNDING SYSTEMS AND DATA LINES

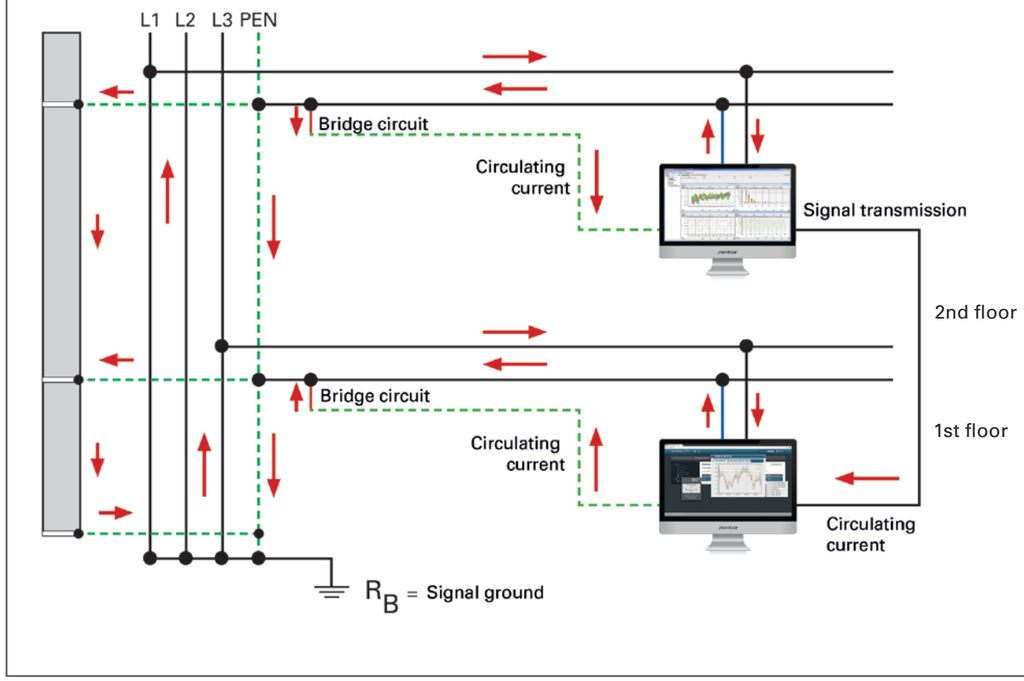

INCREASED FIRE HAZARD

About 31 % of all fires are caused by electricity. As of a residual current of approx. 300 mA (60 watts at 230 V), there is an increased risk of fire.

With continuous RCM monitoring, you can detect excessive residual currents and react in good time.

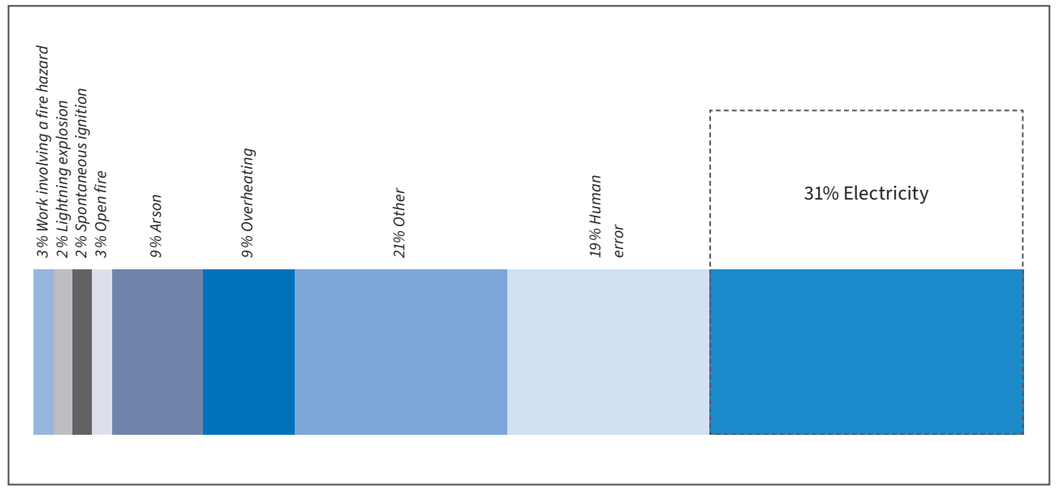

Source: IFS Damage Database (Causes of fire from 2002 to 2023 in Germany)*
**https://www.ifs-ev.org/schadenverhuetung/ursachenstatistiken/ursachenstatistik-brandschaeden-2023/*

PREMATURE WEAR OF EQUIPMENT DUE TO RESIDUAL CURRENTS

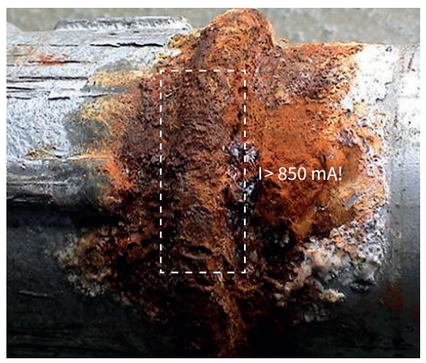



Impermissible currents on equipment: Damage patterns of corroded water pipes in affected piping systems, localized corrosion patterns, pitting and crater-like rust formation.

LIMIT VALUES AND TROUBLE SHOOTING

Limit values for residual current monitoring devices

End circuits of up to 32 A are to be monitored with a fixed limit value of 30 mA. For circuits with a nominal current > 32 A, higher limit values are usually required, e.g. fire protection 300 mA.

For frequency converters, a maximum of 5 % of the phase conductor current is permissible according to e.g. DIN EN 61140! The sum of all leakage and residual currents of the TN-S system and all consumers is measured at the central grouding point (CGP). The total current here should not be greater than 0.2 % to a maximum of 0.5 % of the average phase conductor current of the feeding primary sources (transformers) of one phase.

As a matter of principle: Limit values are empirical values and must be determined according to the type of consumer. Attention must also be paid to the selection of the correct residual current detection technology. The table in the "Residual current types" section provides an overview.

Initial commissioning

During the initial integration and commissioning stage, it is vital to determine the typical “Healthy” leakage current a lowed for the network. This allows continuous dynamic monitoring of alarm thresholds to be set for the installation. This also enables detection of gradual increases in the residual current. Based on historical characteristics of the load and leakage current, the "Healthy" state can be determined and a reasonable residual current limit can be specified. The integrated memories of the measurement devices and the GridVis® power grid monitoring software or superimposed SCADA systems enable time-related statements and analyses.

Dynamic limit values

Modern RCM measurement devices allow different limit value settings. A static limit value has the disadvantage that it is either too large at partial load or too small at full load, i.e. there is either insufficient protection or false alarms occur, which can have a negative effect on the attention of the monitoring personnel in the long term. For this reason, it is recommended to use RCM measurement devices with dynamic limit value adaptation. In this case, the residual current limit value is specified on the basis of the current load conditions and is thus optimally adapted to the applied instantaneous power of the connected electrical consumers.

Type B+ up to 20 kHz for applications with frequency converters, e.g. refrigeration or production

The RCM 202-AB in combination with the RCM analysis app is particularly suitable for monitoring DC and high-frequency residual currents in frequency converters. The Janitza RCM analysis app has extensive possibilities for setting limit values and analyzing residual currents in detail. The evaluation includes all residual current types with an associated frequency analysis. For example, 50 Hz, pure DC or high-frequency residual currents in the 20 kHz range can be displayed individually. This defines the type of error quickly and enables the user to know where to look. For instance, a pure 50 Hz fault may represent a critical insulation fault in the supply line (phase to ground) and a pure DC fault may represent an insulation fault in the DC link of a rectifier.

Frequency converter troubleshooting

If the leakage current (filter current) is too high, the following questions arise:

- Which frequencies and residual current types are involved?
- How is the filter concept structured?
- Individual filters or one large input filter?
- How long are the leads for the EMC cable?
- Shielding of the EMC cable?
- What are the resonance frequencies of the installed filters?
- Is there potential for improvement when changing the switching frequencies of the frequency converters?

A single mixed current value is not sufficient in practice; we recommend a network of connected devices with corresponding RCM analysis variables.

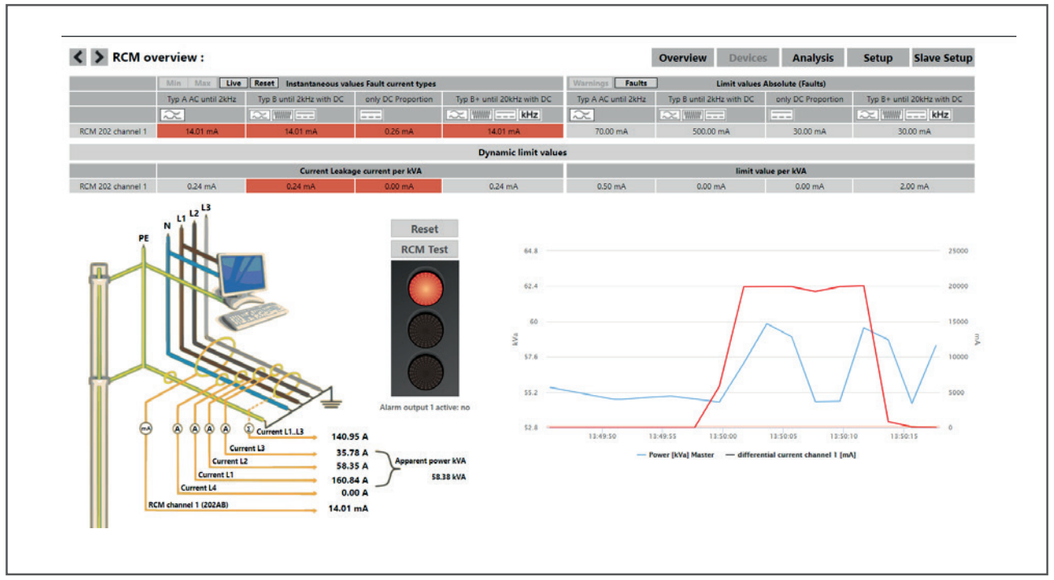

Fig.: Evaluation using the RCM analysis app: all residual current types and limit values in one overview



Fig.: Frequency analysis for type A and type B RCM measurement

RCM NETWORK SYSTEM

Structure of an RCM system with Janitza

Janitza network analyzers allow for a modular and flexible system design across the entire network. All measurement-devices have at least one Modbus RTU interface, alongside options such as Modbus TCP/IP, SNMP, BACnet IP, Profibus or Profinet. This allows integration into previously existing EPMS & BMS systems with no complicated detours using proprietary protocols. Extensive RCM diagnostic variables are available to realize an optimal monitoring solution. In addition, the GridVis® power network monitoring software can be used to manage and visualize all devices.

GridVis® serves as a convenient management system and offers all necessary functions such as:

- Visual device displays, overviews and dashboards
- Realtime measurement data
- Time histories (tamper-proof)
- RCM test reports to fulfill verification requirements (tamper-proof)
- Alarm management for messages to employees
- Escalation levels according to time period

For small systems, the Smart Energy Panel JPC 100-WEB offers a good solution for visualization and display of residual currents on site. It is the tailor-made solution for state monitoring referenced to the specific system.

WHEN PLANNING, BEAR THE FOLLOWING IN MIND

- Risk assessment and objectives
- Define critical measurement points and granularity (in the case of residual currents, it must be possible to localize fault sources quickly)
- Consider possible residual current types
- Transformer dimensioning (mechanical dimensions)
- Networking of the monitoring devices
- Define two independent alarm signaling sources (local signaling, EPMS & BMS signaling in permanently manned control center)
- Define, document and set limit values
- Label CGP and test sites so they are clearly visible
- Test the signaling paths by introducing test errors (functional test)
- Train engineering personnel on site and provide mobile test equipment

ENERGY MONITORING, POWER QUALITY AND RESIDUAL CURRENT MONITORING

MAIN SUPPLY, CGP AND IMPORTANT NODES

SECONDARY DISTRIBUTION

END CONSUMERS & FINAL CIRCUITS

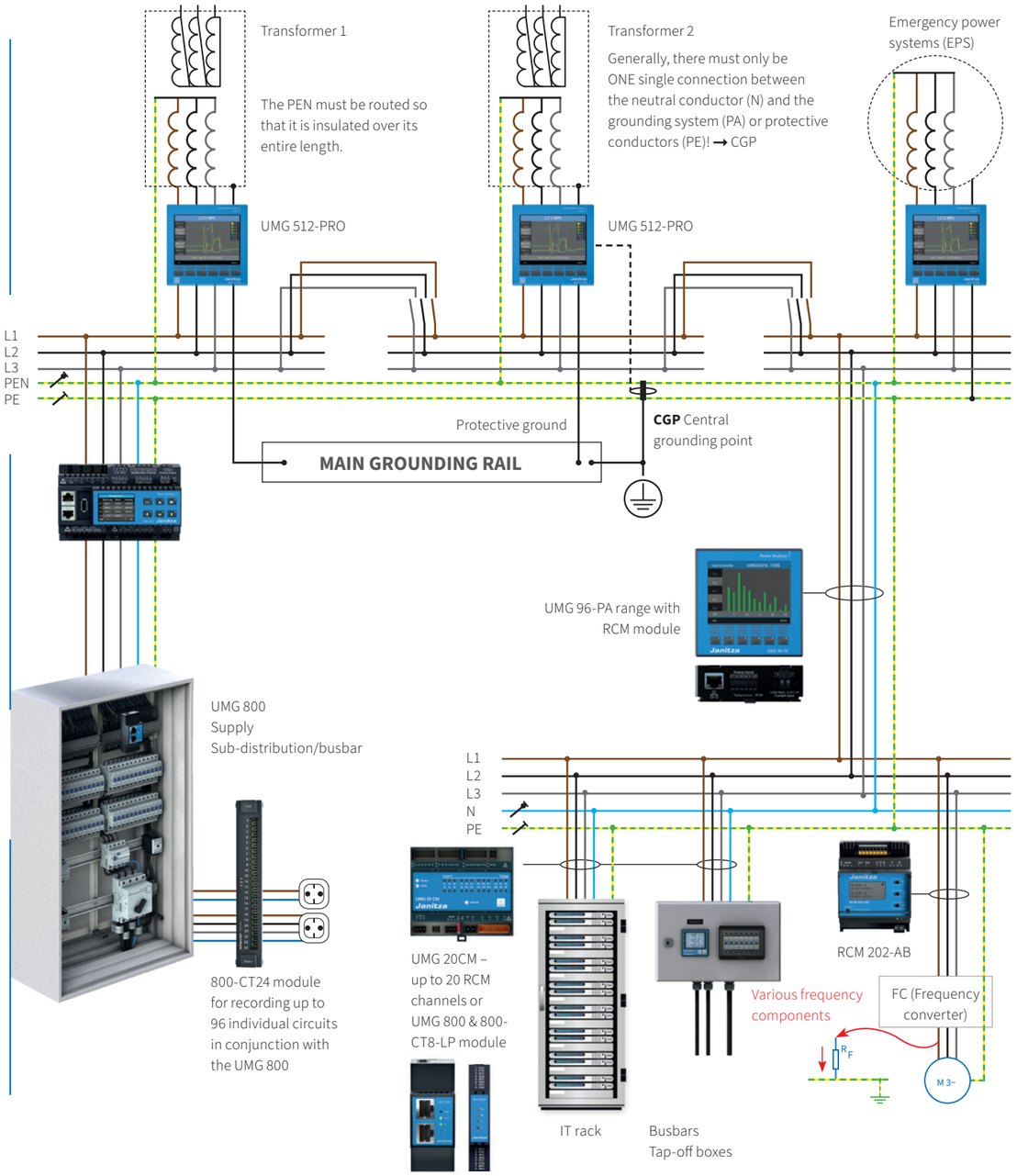



6-CHANNEL OPERATING CURRENT, RESIDUAL CURRENT AND POWER QUALITY

UMG 509-PRO & UMG 512-PRO

- Power quality monitoring valid for legal purposes to class A (only UMG 512-PRO)
- Ideal for feeders
- Monitoring mode for fluctuating and constant loads

UMG 801

- Recording, analyzing and documenting disturbance variables
- Acquisition of transients from 18 µs
- Monitoring 2 paths with one device



MULTICHANNEL OPERATING AND RESIDUAL CURRENT

UMG 96-PA, UMG 96-PA-MID+ & UMG 96-PQ-L & RCM module

- Modularly upgradeable

RCM 202-AB

- Monitoring of Type A to B+ residual currents

UMG 800 & 800-CT8-LP module

- Modularly expandable
- Low power measurement inputs for space-saving and safe installation



20 + 96 RCM channels = 116 channels



MULTICHANNEL RESIDUAL CURRENT MONITORING

UMG 20CM & 20CM-CT6 module

- Ideal for many outgoing feeders and circuits
- Monitoring mode for constant loads
- Basic device for the 20CM-CT6
- Expandable by up to 96 current channels

MULTICHANNEL OPERATING CURRENT MONITORING

UMG 800 & 800-CT8-LP module

- Can be modularly expanded up to 96 measurement channels
- Low power measurement inputs for space-saving and safe installation

GridVis®

THE STRATEGIC POWER GRID MONITORING SOFTWARE FOR ENERGY DATA, POWER QUALITY AND RCM IN ONE SYSTEM

FURTHER INFORMATION

Author & Contact: Dipl.-Ing. Gerald Fritzen, Business Development Manager Datacenters and RCM
Email: gerald.fritzen@janitza.de

IMPORTANT NOTICE
Janitza electronics GmbH® offers a collection of application reports and white papers with in-depth know-how on the topics of energy management, power quality and residual current monitoring. Case studies and reference projects are also covered. These publications are intended to provide our worldwide distributors and representatives, as well as our own employees, with fundamental knowledge as well as information on new trends, all based on solid professionalism. Each individual issue deals with a self-contained application, a specific solution or a technical topic of general interest. It is our intention to share the wide application know-how of Janitza electronics GmbH® and its experts, which has been developed worldwide over a long period of time, with all manner of partners.

Some parts of this publication may make statements about applications, uses or usability in specific fields of application. These statements are based on our experience, typical uses and typical requirements. The contents of this white paper have been compiled by the authors to the best of their knowledge and belief. Despite careful checking of all content, the white paper may no longer be up-to-date after a short period of time or, for example, after changes to laws or other fundamental conditions. Therefore, no liability or warranty can be assumed for the content, accuracy or completeness of this white paper. Insofar as the content of this white paper is used in whole or in part as the basis for one's own decisions, the authors and the publisher assume no responsibility or liability. The white paper is an introduction to the topic and the suggestions mentioned cannot replace any planning or evaluation of individual cases. Our products are specified in detail in our catalogs and operating manuals.ziert.

Download
Janitza RCM brochure

ABOUT JANITZA

Janitza develops comprehensive energy measurement solutions that ensure transparent energy flows and monitor power quality. The global company, headquartered in Germany, provides individual solutions to meet specific customer requirements across a wide range of industries, including data centers, manufacturing, buildings & infrastructure, utilities, and renewable energy.

PRODUCT RANGE

Janitza's portfolio includes innovative measuring devices and the perfectly integrated Power Grid Monitoring Software GridVis®, complemented by high-quality components. Customers worldwide benefit from solutions in energy data management, power quality monitoring, and residual current monitoring, all within a unified system environment – Made in Germany.

HEADQUARTER

Janitza | Location Germany
Vor dem Polstück 6
35633 Lahnau
Phone: +49 6441 9642-0
Email: anfragen@janitza.de

www.janitza.com

Doc. no.: 2.700.029.2 ▪ Last update 07/2025 ▪ Subject to technical alternations.

GLOBAL

Janitza | Location USA
Phone: +1 888 526 4892
Email: sales-us@janitza.com

Janitza | Location Australia
Phone: +61 411 544 114
Email: sales-au@janitza.com

Janitza | Location India
Phone: +91 900 387 6980
Email: sales-in@janitza.com

Janitza | Location Austria
Phone: +43 7942 214 966 194
Email: anfragen-at@janitza.com

Janitza | Location UK
Phone: +44 7939 697 434
Email: sales-uk@janitza.com

Janitza | Location Middle East
Phone: +971 54 404 8001
Email: sales-me@janitza.com

Janitza®

© This content is published by Janitza electronics GmbH ▪ Vor dem Polstück 6 ▪ 35633 Lahnau, Germany
Responsible for the editorial content: Dipl.-Ing. Gerald Fritzen ▪ Contact: gerald.fritzen@janitza.de